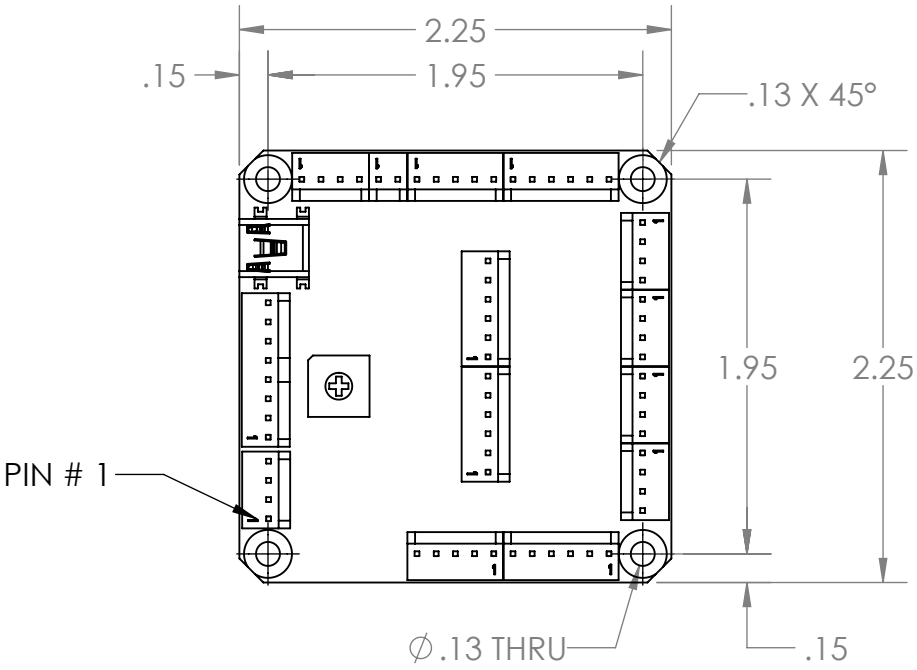
2.25
.15
1.95
.13 X 45°
1.95
2.25
PIN # 1
∅.13 THRU
.15

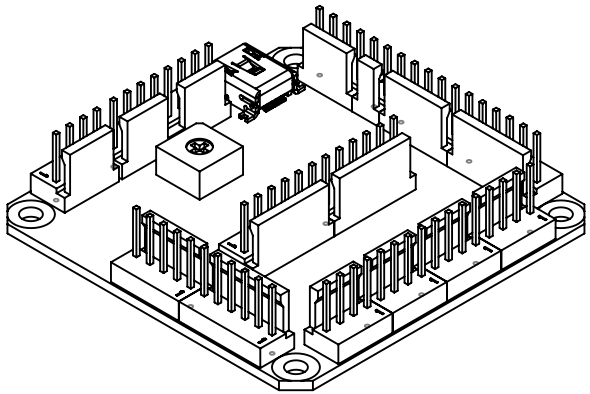

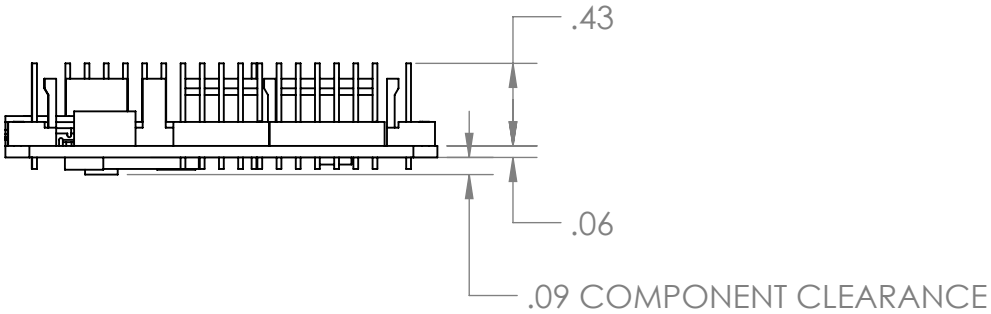
.43
.06
.09 COMPONENT CLEARANCE